CENTAX-K

ENGLISH

Is this PDF up to date?
click here for an update check!

CENTAX-K

SYSTEM

At a glance
Page 03

Design types
Page 05

AREAS OF APPLICATION

**Product selection:
Which coupling for which purpose?**
Page 07

TECHNICAL DATA

**Product application:
Which feature for which coupling?**
Page 09

SERVICE

Explanation of the technical data
Page APP-1

Contact
Page APP-6

Is this PDF up to date?
click here for an update check!

CENTAX-K
AT A GLANCE

A coupling for diesel-driven compressor or pump drives should have one primary feature: to be as uncompromising regarding ease in mounting as our new CENTAX-K.

The torsionally soft coupling is based on a rubber element that features high torsional flexibility and radial movability vulcanised to a glass-fibre reinforced plastic flange with an integrated hub on the output side of the KS design and a seperate hub star for the KK design. The coupling designs can be plugged in axially to ensure maximum ease in mounting. And, the design is also impressive considering its dimensions and cost.

The torsional flexibility of the CENTAX-KS dampens torsional vibrations and impacts and compensates for any axial and radial misalignments due to operation. The rubber element for this coupling is available in various designs. Currently, the series covers torques ranging from 400 to 800 Nm.

Features

High torsional flexibility

Compact dimensions

Maximum ease in mounting

Low-cost

Areas of application

Compressor drives

Pump drives

Hydrostatic drives

torque range	0.4 to 0.8 kNm	
elastic material	NR / Si	
temperature range	NR	–45° to +80°C
	Si	–45° to +120°C

LEADING BY INNOVATION

TORSIONAL FLEXIBILITY

The CENTAX rubber elements are available in different degrees of Shore hardness. This enables the torsional flexibility of the couplings to be adapted with utmost variability to the specific application. Torsional vibrations and impacts are reliably dampened.

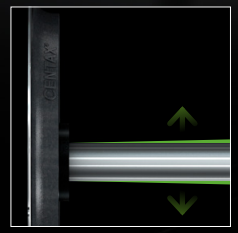

FUNCTIONS

The CENTA coupling programm offers many functions to protect your drive from harmful torsional vibrations, to compensate misalignment and to dampen vibrations and noise. Reliable power transmission for your applications with an optimum of features.

MISALIGNMENT CAPABILITY

CENTA's coupling systems convince with kinematics unique to the market. They offer the necessary misalignment capability for each application, maximized through numeric calculations and endurance tests (type test).
Ensuring a reliable compensation of misalignments even with short drive shafts and an efficient damping of vibration and noise.

MODULARITY

All standard flywheel connections can be realized with our CENTAX-K allowing for adequate design for any application.
For efficient and fast customized solutions.

QUALITY

When the going gets tough, quality is priceless. With an exemplary Quality Management, CENTA ensures products that withstand the roughest assignments. CENTA's coupling systems are more than the sum of their parts. CENTA entertains the vision of intelligent products that meet the highest requirements in terms of design and quality.

CENTAX-K

DESIGN TYPES

Which product for your purpose?
We will gladly assist → www.centa.info/contact

CENTAX-K
DESIGN TYPES

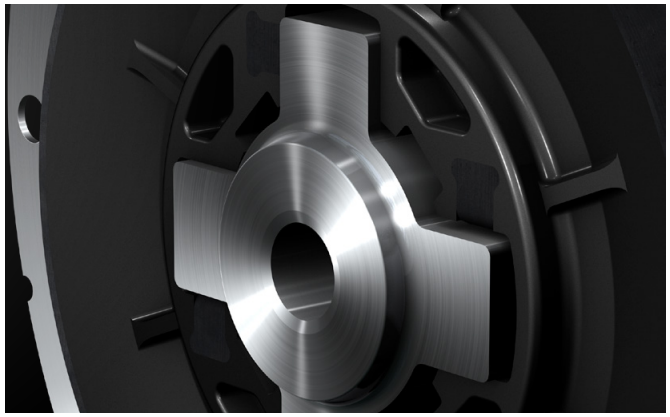

CENTAX-KK

The CENTAX-KK is a two piece connection to the driven units. By use of the additional well proven hub-star of CENTAFLEX-K an axial plug-in is achieved. The design thus allows for key connections, conical clamping or the CENTALOC-clamping. The positive locking of the hubstar by an integrated rubber bumper resulted in a further innovation. The fix rotating direction coupling becomes free of backlash and is noise reduced during operation. .

CENTAX-KN

The CENTAX-KN is a two piece connection to the driven units. By use of the additional well proven hubstar of the CENTAFLEX-K in steel or aluminium, an axial plug-in is achieved. The design thus allows for key connections, conical clamping or the CENTALOC-clamping.

CENTAX-KS

The CENTAX-KS is a two piece connection to the driven units. By use of a hub in steel or aluminium with outer toothing an axial plug-in is achieved. The design allows for key connections, conical clamping or the CENTALOC-clamping.

CENTAX-K

APPLICATIONS

Which product for your purpose?
We will gladly assist → www.centa.info/contact

CENTAX-K
APPLICATIONS

INDUSTRY APPLICATIONS

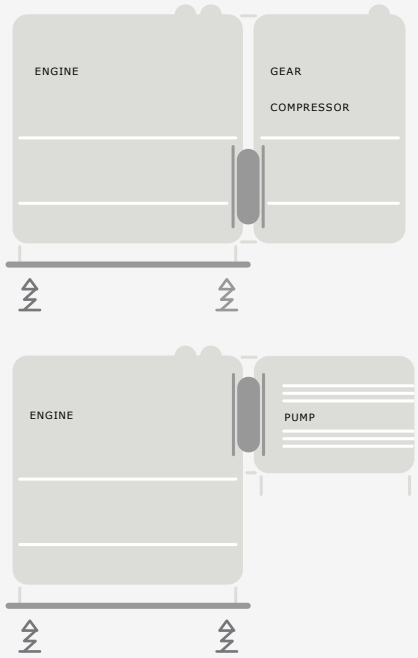

MARINE APPLICATIONS

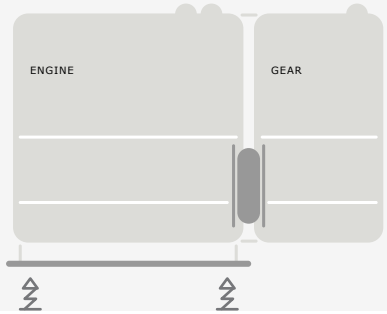

ENERGY APPLICATIONS

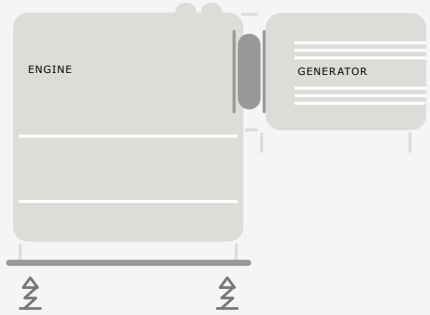

Which product for your purpose?
We will gladly assist → www.centa.info/contact

CENTAX-K

TECHNICAL DATA

TECHNICAL DATA

CENTAX-KK/KS
Page 10

CENTAX-KN
Page 13

DIMENSIONS

CENTAX-KK
Page 11

CENTAX-KS
Page 12

CENTAX-KN
Page 13

Explanation of the table headers → page APP-1

CENTAX-KK/KS

TECHNICAL DATA ↓ **SIZES 22–28**

1	2	3	4	5	6*	7*	8	9	10	12	13	14	
Size	Rubber quality [Shore A]	Nominal torque T_{KN} [kNm]	Maximum torque T_{Kmax} [kNm]	Continuous vibratory torque T_{KW} [kNm]	Permissible power loss P_{KV} [W]	Dynamic torsional stiffness C_{Tdyn} [kNm/rad]	Relative damping Ψ	Speed n_{max} [min^{-1}]	Permissible axial displacement ΔK_a [mm]	Permissible radial displacement ΔK_r [mm]	Radial stiffness C_r [kN/mm]	Permissible angular displacement ΔK_w [°]	Flange size SAE J620
22	50	0,40	0,80	0,16	150	2,6	1,05	5000	±2	0,6	0,75	0,5	7,5 8 10
	60	0,50	1,00	0,20		3,2	1,10				0,85	0,5	
25	50	0,55	1,10	0,22	160	3,5	1,05	5000	±2	0,6	1,00	0,5	8 10
	60	0,68	1,36	0,27		4,3	1,10				1,10	0,5	
28	50	0,63	1,26	0,25	170	4,0	1,05	5000	±2	0,6	1,10	0,5	10 11,5
	60	0,80	1,60	0,32		5,0	1,10				1,20	0,5	

* preliminary values

CENTAX-KK

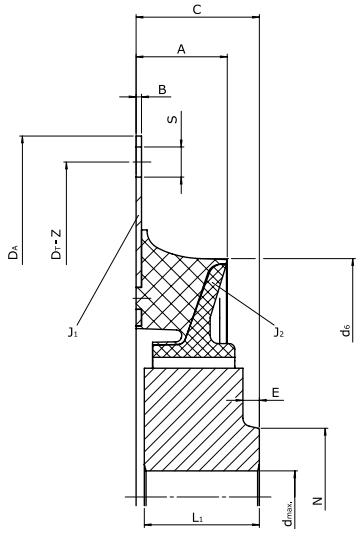

DIMENSIONS ↓ **SIZES 22–28**

Size	Nominal torque T_{KN} [kNm]	Dimensions A	B	C	d_{max}	d_6	E	L_1	N	Flange dimensions SAE J620	D_A [-0,15]	D_T [±0,2]	Z	S	Mass moments of intertia and masses J_1 [kgm²]	J_2	m_1 [kg]	m_2	m_{total}
22	0,40 – 0,50	33,3	2	45	40	174	6	42	50	7,5	241,3	222,3	8x45°	9	0,006	0,003	0,74	1,56	2,30
										8	263,5	244,5	6x60°	11	0,008	0,003	0,88	1,56	2,44
										10	314,3	295,3	8x45°	11	0,015	0,003	1,23	1,56	2,79
25	0,55 – 0,68	35,4	2	45	40	187	6	42	50	8	263,5	244,5	6x60°	11	0,008	0,004	0,90	1,69	2,59
										10	314,3	295,3	8x45°	11	0,016	0,004	1,26	1,69	2,95
28	0,63 – 0,80	36,6	2	45	40	194	6	42	50	10	314,3	295,3	8x45°	11	0,016	0,004	1,30	1,74	3,04
										11,5	352,4	333,4	8x45°	11	0,025	0,004	1,62	1,74	3,36

CENTAX-KS

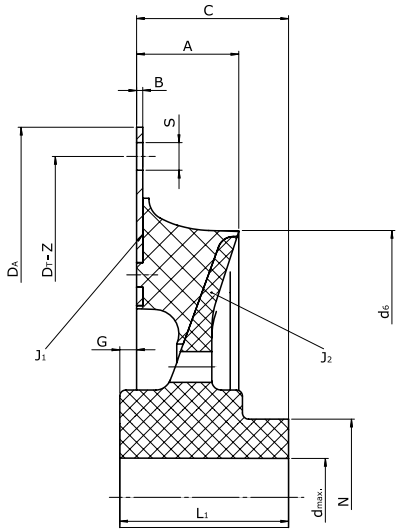

DIMENSIONS ↓ **SIZES 22–28**

Size	Nominal torque T_{KN} [kNm]	Dimensions A	B	C	d_{max}	d_6	G	L_1	N	Flange dimensions SAE J620	D_A [-0,15]	D_T [±0,2]	Z	S	Mass moments of intertia and masses J_1 [kgm²]	J_2	m_1 [kg]	m_2	m_{total}
22	0,40 – 0,50	33,3	2	49,5	40	174	5,5	55	51	7,5	241,3	222,3	8x45°	9	0,006	0,002	0,71	0,56	1,27
										8	263,5	244,5	6x60°	11	0,008	0,002	0,84	0,56	1,40
										10	314,3	295,3	8x45°	11	0,015	0,002	1,19	0,56	1,75
25	0,55 – 0,68	35,4	2	49,5	40	187	5,5	55	51	8	263,5	244,5	6x60°	11	0,009	0,003	0,91	0,65	1,56
										10	314,3	295,3	8x45°	11	0,016	0,003	1,26	0,65	1,91
28	0,63 – 0,80	36,6	2	49,5	40	194	5,5	55	51	10	314,3	295,3	8x45°	11	0,016	0,003	1,25	0,76	2,01
										11,5	352,4	333,4	8x45°	11	0,025	0,003	1,56	0,76	2,32

CENTAX-KN

TECHNICAL DATA ↓ **SIZES 22–28**

1	2	3	4	5	6*	7*	8	9	10	12	13	14	
Size	Rubber quality [Shore A]	Nominal torque T_{KN} [kNm]	Maximum torque T_{Kmax} [kNm]	Continuous vibratory torque T_{KW} [kNm]	Permissible power loss P_{KV} [W]	Dynamic torsional stiffness C_{Tdyn} [kNm/rad]	Relative damping Ψ	Speed n_{max} [min^{-1}]	Permissible axial displacement ΔK_a [mm]	Permissible radial displacement ΔK_r [mm]	Radial stiffness C_r [kN/mm]	Permissible angular displacement ΔK_w [°]	Flange size SAE J620
22	50	0,40	0,80	0,16	150	1,80	1,05	5000	±2	0,6	0,75	0,5	7,5 - 8 - 10
	60	0,50	1,00	0,20		2,70	1,10				0,85	0,5	
25	50	0,55	1,10	0,22	160	2,40	1,05	5000	±2	0,6	1,00	0,5	8 - 10
	60	0,68	1,36	0,27		3,60	1,10				1,10	0,5	
28	50	0,63	1,26	0,25	170	3,00	1,05	5000	±2	0,6	1,10	0,5	10 - 11,5
	60	0,80	1,60	0,32		4,50	1,10				1,20	0,5	

* preliminary values

CENTAX-KN

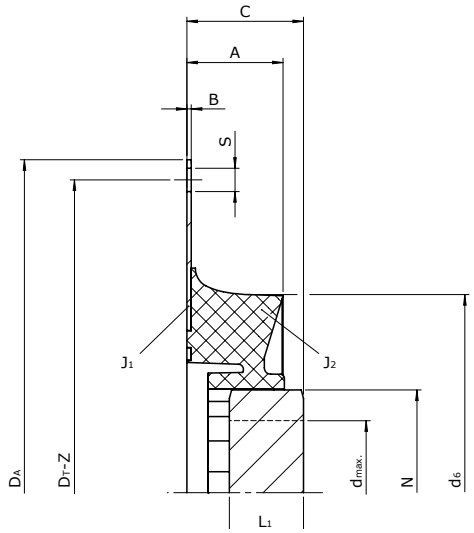

DIMENSIONS ↓ **SIZES 22–28**

Size	Nominal torque T_{KN} [kNm]	Dimensions A	B	C	d_{max}	d_6	L_1	N	Flange dimensions SAE J620	D_A [-0,15]	D_T [±0,2]	Z	S	Mass moments of intertia and masses J_1 [kgm²]	J_2	m_1 [kg]	m_2	m_{total}
22	0,40 – 0,50	43,4	2	55	68	174	35	97	7,5	241,3	222,3	8x45°	9	0,007	0,004	0,76	2,32	3,08
									8	263,5	244,5	6x60°	11	0,009	0,004	0,90	2,32	3,22
									10	314,3	295,3	8x45°	11	0,016	0,004	1,25	2,32	3,57
25	0,55 – 0,68	45,4	2	55	68	187	35	97	8	263,5	244,5	6x60°	11	0,010	0,005	0,99	2,44	3,43
									10	314,3	295,3	8x45°	11	0,017	0,005	1,34	2,44	3,78
28	0,63 – 0,80	46,4	2	55	68	194	35	97	10	314,3	295,3	8x45°	11	0,017	0,006	1,40	2,51	3,91
									11,5	352,4	333,4	8x45°	11	0,026	0,006	1,71	2,51	4,22

EXPLANATION OF THE TECHNICAL DATA

This appendix shows all explanations of the technical data for all CENTA products.

the green marked explanations are relevant for this catalog:

1	Size	Page APP-2
2	Rubber quality	Page APP-2
3	Nominal torque	Page APP-2
4	Maximum torque	Page APP-2
5	Continuous vibratory torque	Page APP-2
6	Permissible power loss	Page APP-2
7	Dynamic torsional stiffness	Page APP-3
8	Relative damping	Page APP-3
9	Speed	Page APP-3
10	Permissible axial displacement	Page APP-3
11	Axial stiffness	Page APP-4
12	Permissible radial displacement	Page APP-4
13	Radial stiffness	Page APP-4
14	Permissible angular displacement	Page APP-4
15	Angular stiffness	Page APP-4

Are these technical explanations up to date?
click here for an update check!

EXPLANATION OF THE TECHNICAL DATA

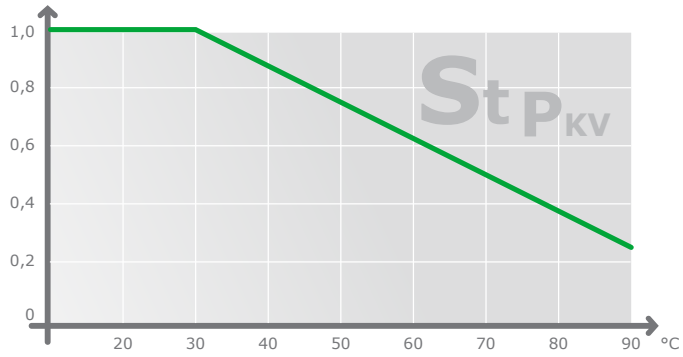

1

Size

This spontaneously selected figure designates the size of the coupling.

2

Rubber quality

Shore A

This figure indicates the nominal shore hardness of the elastic element.

The nominal value and the effective value may deviate within given tolerance ranges.

3

Nominal torque

T_{KN} [kNm]

Average torque which can be transmitted continuously over the entire speed range.

4

Maximum torque

[kNm]

T_{Kmax}	This is the torque that may occur occasionally and for a short period up to 1.000 times and may not lead to a substantial temperature rise in the rubber element.

In addition the following maximum torques may occur:

$\Delta T_{Kmax} = 1{,}8 \times T_{KN}$	Peak torque range (peak to peak) between maximum and minimum torque, e.g. switching operation.
$T_{Kmax1} = 1{,}5 \times T_{KN}$	Temporary peak torque (e.g. passing through resonances). ΔT_{Kmax} or T_{Kmax1} may occur 50.000 times alternating or 100.000 times swelling.
$T_{Kmax2} = 4{,}5 \times T_{KN}$	Transient torque rating for very rare, extraordinary conditions (e.g. short circuits).

5

Continuous vibratory torque

T_{KW} [kNm]

Amplitude of the continuously permissible periodic torque fluctuation with a basic load up to the value T_{KN}.

The frequency of the amplitude has no influence on the permissible continuous vibratory torque. Its main influence on the coupling temperature is taken into consideration in the calculation of the power loss.

Operating torque

T_{Bmax} [kNm]

The maximum operating torque results of T_{KN} and T_{KW}.

6

Permissible Power Loss

P_{KV} [kW] or [W]

Damping of vibrations and displacement results in power loss within the rubber element.

The permissible power loss is the maximum heat (converted damping work into heat), which the rubber element can dissipate continuously to the environment (i.e. without time limit) without the maximum permissible temperature being exceeded.

The given permissible power loss refers to an ambient temperature of 30° C.

If the coupling is to be operated at a higher ambient temperature, the temperature factor S_{tPKV} has to be taken into consideration in the calculation.

The coupling can momentarily withstand an increase of the permissible power loss for a short period under certain operation modes (e.g. misfiring).

P_{KVZ} [kW]

Defines an individual and proven guide for power loss under misfiring. This value acknowledges general information of the engine suppliers, in particular the real appearance of misfiring and implemented control and protection devices. Values on request.

EXPLANATION OF THE TECHNICAL DATA

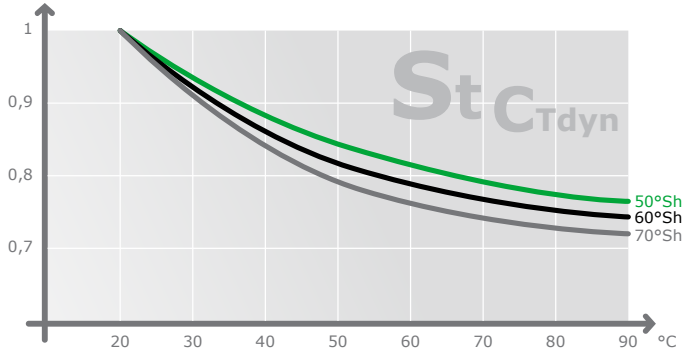

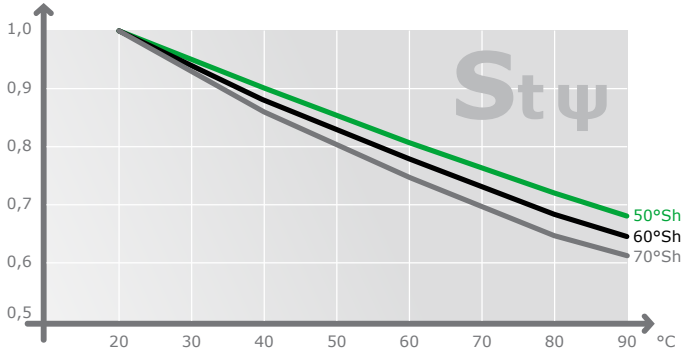

7

Dynamic torsional stiffness

C_{Tdyn} [kNm/rad]

The dynamic torsional stiffness is the relation of the torque to the torsional angle under dynamic loading.

The torsional stiffness may be linear or progressive depending on the coupling design and material.

The value given for couplings with linear torsional stiffness considers following terms:

- Pre-load: 50% of T_{KN}
- Amplitude of vibratory torque: 25% of T_{KN}
- Ambient temperature: 20°C
- Frequency: 10 Hz

For couplings with progressive torsional stiffness only the pre-load value changes as stated.

The tolerance of the torsional stiffness is ±15% if not stated otherwise.

The following influences need to be considered if the torsional stiffness is required for other operating modes:

- Temperature
  Higher temperature reduces the dynamic torsional stiffness.
  Temperature factor $S_{t\,C_{Tdyn}}$ has to be taken into consideration in the calculation.
- Frequency of vibration
  Higher frequencies increase the torsional stiffness.
  By experience the dynamic torsional stiffness is 30% higher than the static stiffness. CENTA keeps record of exact parameters.
- Amplitude of vibratory torque
  Higher amplitudes reduce the torsional stiffness, therefore small amplitudes result in higher dynamic stiffness. CENTA keeps record of exact parameters.

8

Relative damping

ψ

The relative damping is the relationship of the damping work to the elastic deformation during a cycle of vibration.

The larger this value [ψ], the lower is the increase of the continuous vibratory torque within or close to resonance.

The tolerance of the relative damping is ±20%, if not otherwise stated.

The relative damping is reduced at higher temperatures.

Temperature factor $S_{t\psi}$ has to be taken into consideration in the calculation.

The vibration amplitude and frequency only have marginal effect on the relative damping.

9

Speed

[min^{-1}]

n_{max}	The maximum speed of the coupling element, which may occur occasionally and for a short period (e.g. overspeed). The characteristics of mounted parts may require a reduction of the maximum speed (e.g. outer diameter or material of brake discs).
n_d	The maximum permissible speed of highly flexible coupling elements is normally 90% thereof.

10

Permissible axial displacement

[mm]

ΔK_a	The continuous permissible axial displacement of the coupling. This is the sum of displacement by assembly as well as static and dynamic displacements during operation.
$\Delta K_{a\,max}$	The maximum axial displacement of the coupling, which may occur occasionally for a short period (e.g. extreme load). The concurrent occurrence of different kinds of displacements is handled in technical documents (displacement diagrams, data sheets, assembly instructions).

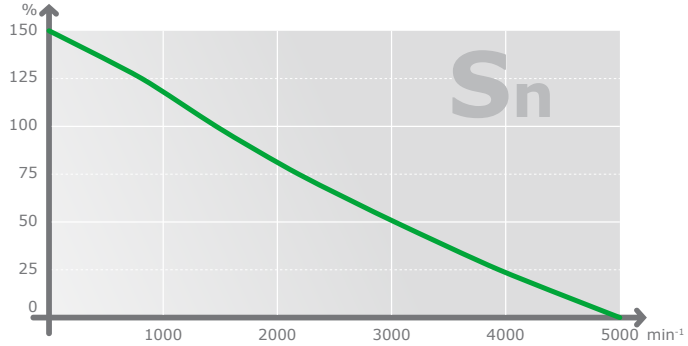

EXPLANATION OF THE TECHNICAL DATA

11	
Axial stiffness [kN/mm]	
C_a	The axial stiffness determines the axial reaction force on the input and output sides upon axial displacement.
$C_{a\ dyn}$	By experience the dynamic stiffness is higher than the static one. The factor depends on the coupling series.

12	
Permissible radial displacement [mm]	
ΔK_r	The continuous permissible radial displacement of the coupling. This is the sum of displacement by assembly as well as static and dynamic displacements during operation. The continuous permissible radial displacement depends on the operation speed and may require adjustment (see diagrams S_n of the coupling series).
$\Delta K_{r\ max}$	The maximum radial displacement of the coupling, which may occur occasionally and for a short period without consideration of the operation speed (e.g. extreme overload). The concurrent occurrence of different kinds of displacements is handled in technical documents (displacement diagrams, data sheets, assembly instructions).

13	
Radial stiffness [kN/mm]	
C_r	The radial stiffness determines the radial reaction force on the input and output sides upon radial displacement.
C_{rdyn}	By experience the dynamic stiffness is higher than the static one. The factor depends on the coupling series.

14	
Permissible angular displacement [∡°]	
ΔK_w	The continuous permissible angular displacement of the coupling. This is the sum of displacement by assembly as well as static and dynamic displacements during operation. The continuous permissible angular displacement depends on the operation speed and may require adjustment (see diagrams S_n of the coupling series).
$\Delta K_{w\ max}$	The maximum angular displacement of the coupling, which may occur occasionally and for a short period without consideration of the operation speed (e.g. extreme overload). The concurrent occurrence of different kinds of displacements is handled in technical documents (displacement diagrams, data sheets, assembly instructions).

15	
Angular stiffness [kNm/°]	
C_w	The angular stiffness determines the restoring bending moment on the input and output sides upon angular displacement.
C_{wdyn}	By experience the dynamic stiffness is higher than the static one. The factor depends on the coupling series.

CENTAX-K
© 2017 by CENTA Antriebe Kirschey GmbH
Rev. CX-K-EN-03-17

1. This catalog supersedes previous editions.

   This catalog shows the extent of our CENTAX®-SEC coupling range at the time of printing. This program is still being extended with further sizes and series. Any changes due to technological progress are reserved.

   We reserve the right to amend any dimensions or detail specified or illustrated in this publication without notice and without incurring any obligation to provide such modification to such couplings previously delivered. Please ask for an application drawing and current data before making a detailed coupling selection.

2. We would like to draw your attention to the need of preventing accidents or injury. No safety guards are included in our supply.

3. TRADEMARKS

   CENTA, the CENTA logo, Centacone, CENTADISC, CENTAFIT, Centaflex, CENTALINK, Centalock, Centaloc, Centamax, Centastart, CENTAX and HYFLEX are registered trademarks of CENTA Antriebe Kirschey GmbH in Germany and other countries.

   Other product and company names mentioned herein may be trademarks of their respective companies.

4. Torsional responsibility

   The responsibility for ensuring the torsional vibration compatibility of the complete drive train, rests with the final assembler. As a component supplier CENTA is not responsible for such calculations, and cannot accept any liability for gear noise/-damage or coupling damage caused by torsional vibrations.

   CENTA recommends that a torsional vibration analysis (TVA) is carried out on the complete drive train prior to start up of the machinery. In general torsional vibration analysis can be undertaken by engine manufacturers, consultants or classicfication societies. CENTA can assist with such calculations using broad experience in coupling applications and torsional vibration analysis.

5. Copyright to this technical dokument is held by CENTA Antriebe Kirschey GmbH.

6. The dimensions on the flywheel side of the couplings are based on the specifications given by the purchaser. The responsibility for ensuring dimensional compatibility rests with the assembler of the drive train. CENTA cannot accept liability for interference between the coupling and the flywheel or gearbox or for damage caused by such interference.

7. All technical data in this catalog are according to the metric SI system. All dimensions are in mm. All hub dimensions (N, N_1 and N_2) may vary, depending on the required finished bore. All dimensions for masses (m), inertias (J) and centres of gravity (S) refer to the maximum bore diameter.

CENTA Power Transmission is now part of Rexnord. As a global leader in premium couplings, Rexnord provides the same high quality customer solutions and service you‘ve come to expect from CENTA since 1970.

WWW.CENTA.INFO/CONTACT

WWW.REXNORD.COM

CENTA
HEAD OFFICE

CENTA Antriebe
Kirschey GmbH

Bergische Strasse 7
42781 Haan/Germany

+49-2129-912-0 Phone
+49-2129-2790 Fax

info@centa.de

REXNORD POWER TRANSMISSION
HEAD OFFICE

4701 W Greenfield Ave
Milwaukee, WI 53214
USA

+1-414-643-3000 Phone